Hidden Ground Loop Isolator

Remove Center Console Panel

Plug from
Radio harness

5-Pin
Connector

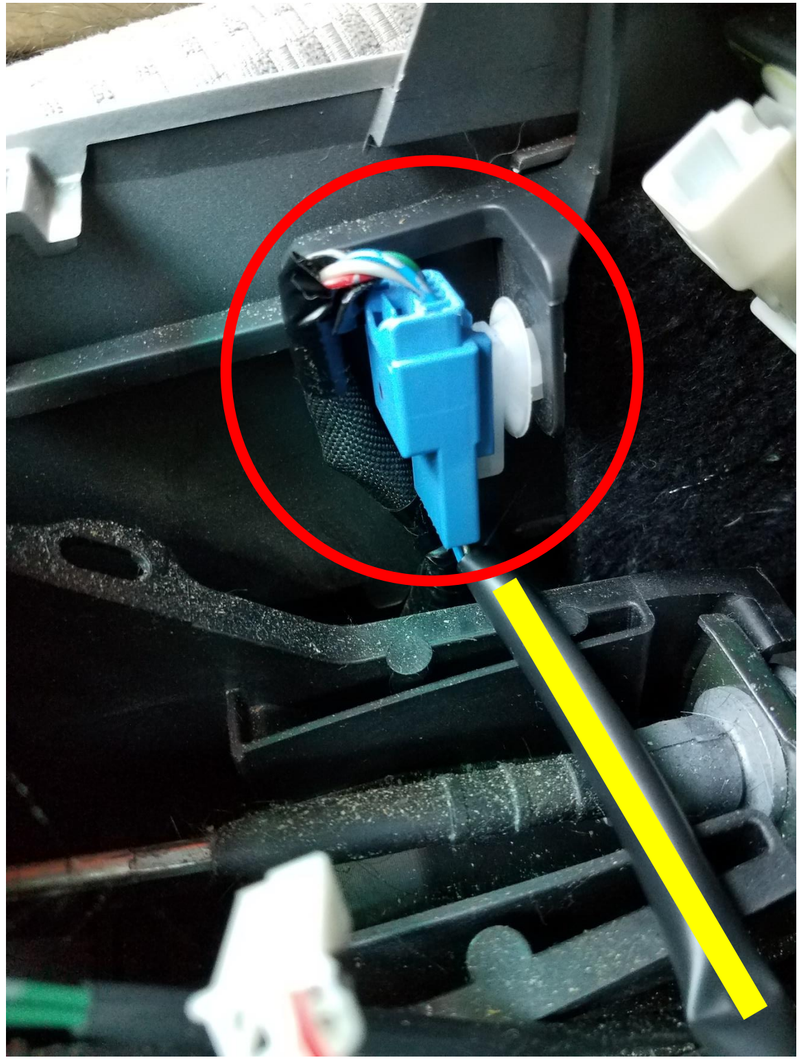

Towards Radio

Towards Center
Console

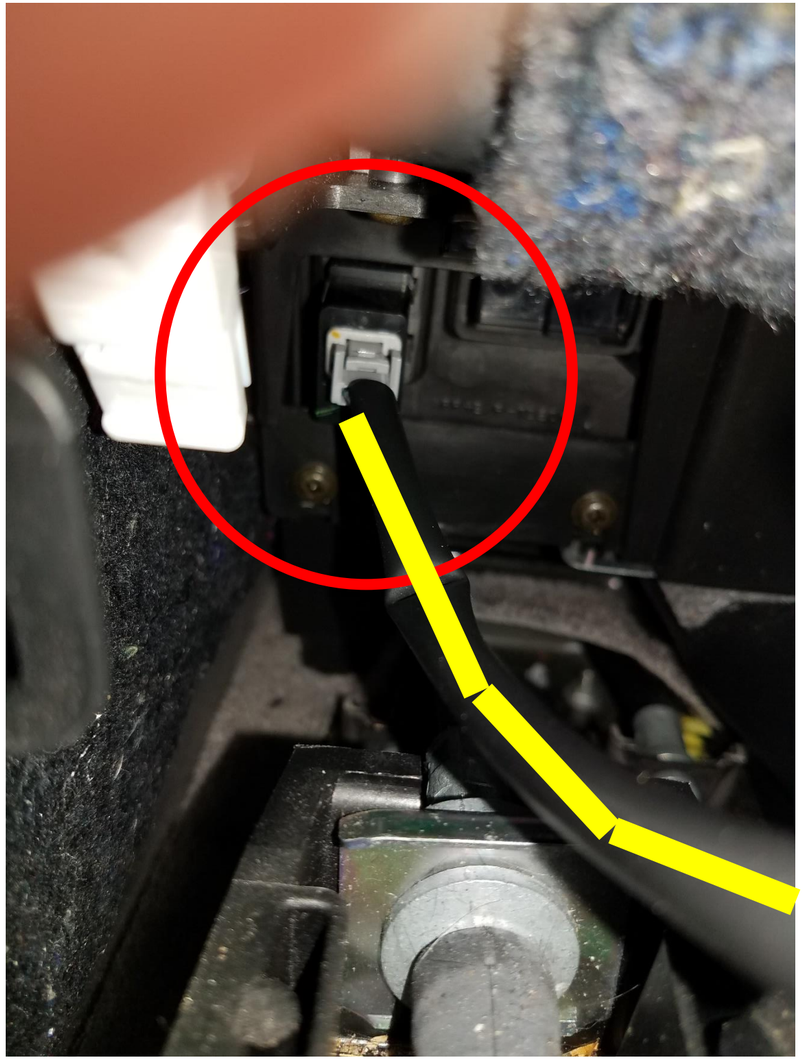

Plug to 3.5mm
jack in center
console

4-pin
connector

Stock Wiring Harness

- Remove harness

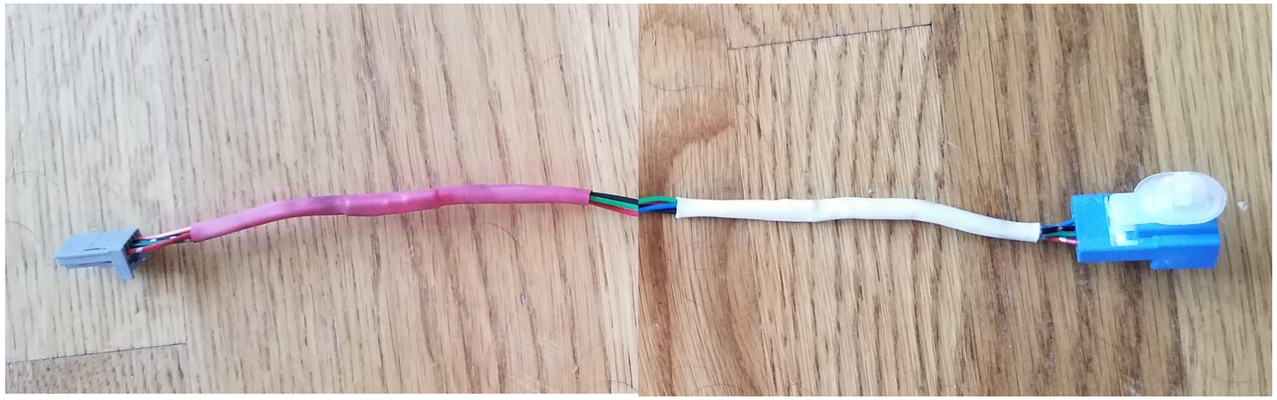

Create the Ground Loop Isolator

Wiring Diagram

Cut all wires of the harness in the middle

Pin Number	Color	Description
1	Red	Aux Left
2	Green	Aux Right
3	Black	Aux Ground
4	Blue	Aux Signal Switch
5	empty	N/A

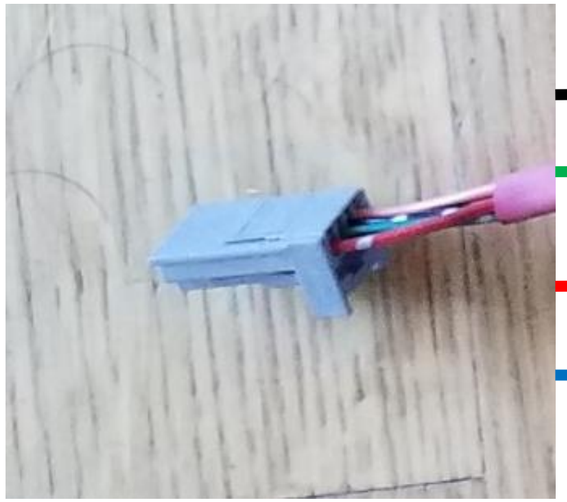

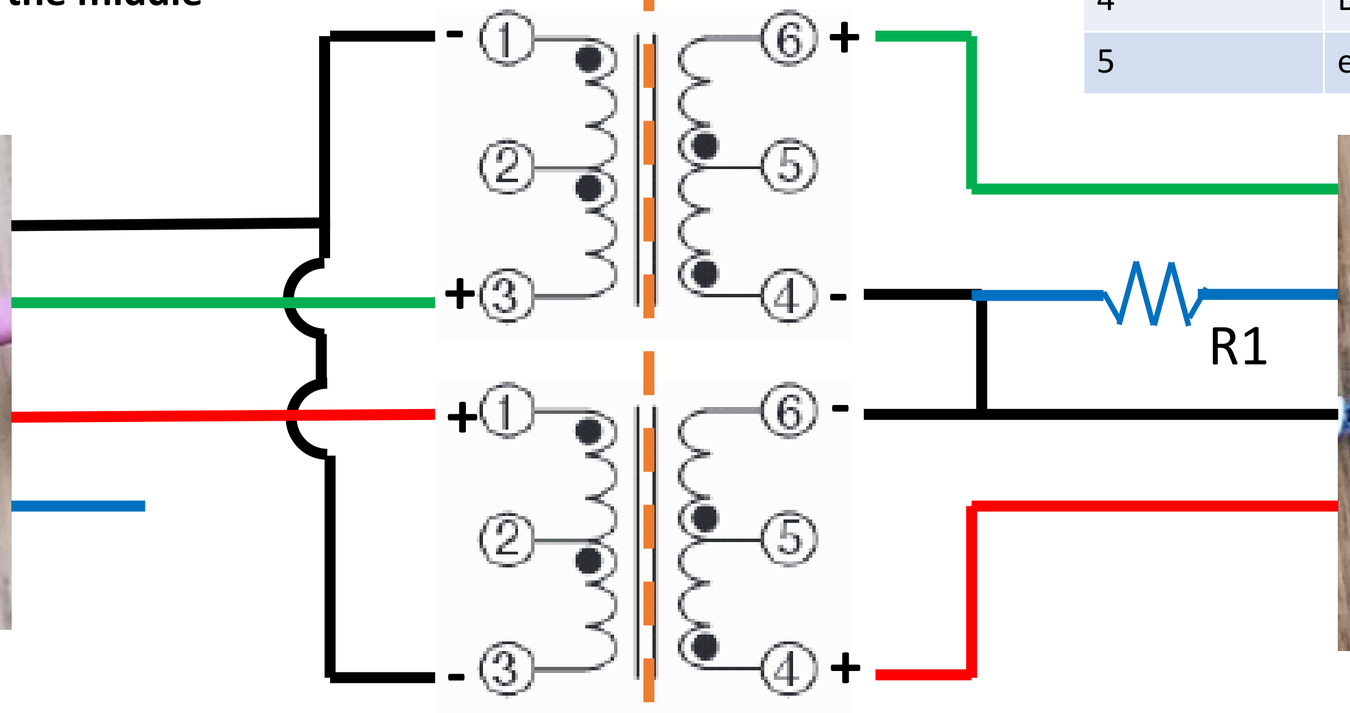

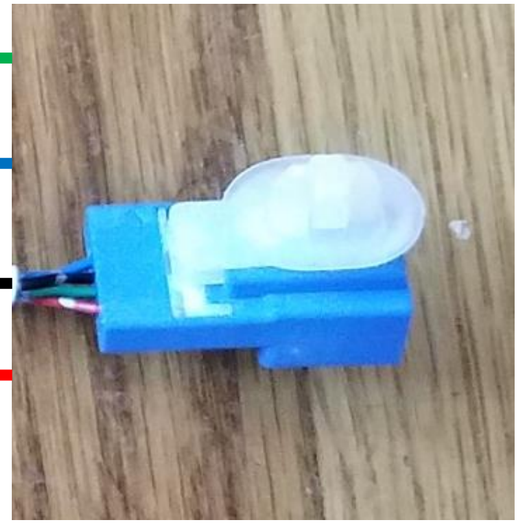

Plug to 3.5mm jack in center console

4-pin connector

Cut blue and connect to NOTHING, you no longer need it on this side of the harness

Connect blue to ground through R1 = 5.6k Ohm on this side of the harness

Plug from Radio harness

5-Pin Connector

Why used a 5.6k Ohm resistor?

- When using the stock, unaltered harness, the blue wire is used as a signal to switch to AUX. When a 3.5mm AUX cable is connected, the voltage in the blue line drops from 1.72 V to 0.6 V b/c the port switches the blue voltage across a 5.6k Ohm resistor.
- When you insert the Ground Loop Isolator into the circuit, you are essentially creating two separate circuits that are interacting via an electromagnetic field, therefore the OLD resistor in the switch no longer interacts with head unit blue wire.
- So you insert a NEW 3.5k Ohm resister on the Head Unit side of the circuit to drop the voltage from 1.72 V to 0.6 V, tricking the Head Unit to think there is an AUX cable connected.

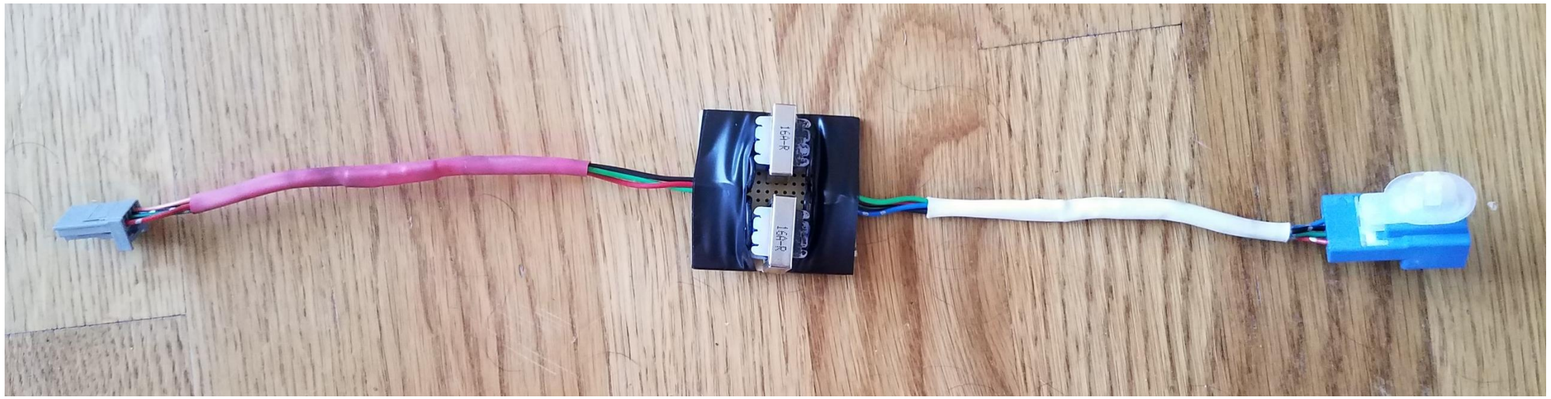

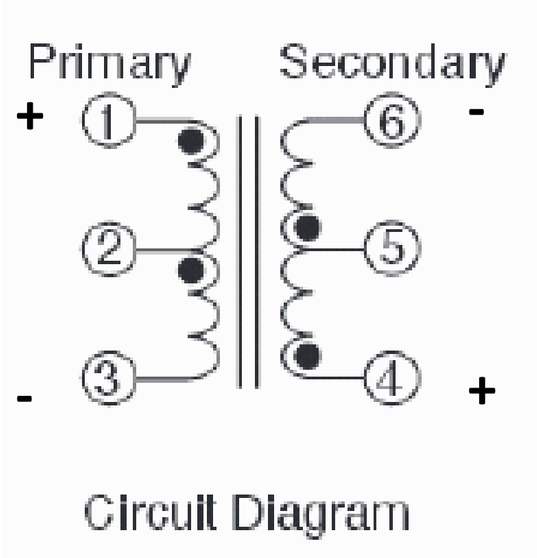

- Do not use the center pins (2 and 5) on the transformers, I cut them off
- Left and right channels have a common ground

2x Audio Transformers
- Model: Xicon 42TL016-R
- Ratio: 1:1
- Resistance: 600 Ohm

1x Printed Circuit Board

1x 5.6 Ohm Resistor

Wire, Solder, Soldering Iron

Purchase Isolator Instead of Making One

PAC SNI-1/3.5 3.5-mm Ground Loop Noise Isolator

I have not tested with this PAC ground loop isolator. Color combinations inside aux cords are varied from my audio, electrical experience.

Usually you will have red with white or red with black, with a copper braided shielding and possibly a foil shielding. (trim foil if it is present, no need to connect it to ground)

As long as you are consistent with your connections within your center console wiring harness, it will work.

Color	Description
Red	Channel 1
White	Channel 2
Orange	Braided Copper Shielding
Grey	Foil Shielding (may or may not be present)

Insert Ground Loop Isolator into the cut stock harness

Still need to connect blue wire from Head Unit side to through 5.6k Ohm resistor to ground on the Head unit side